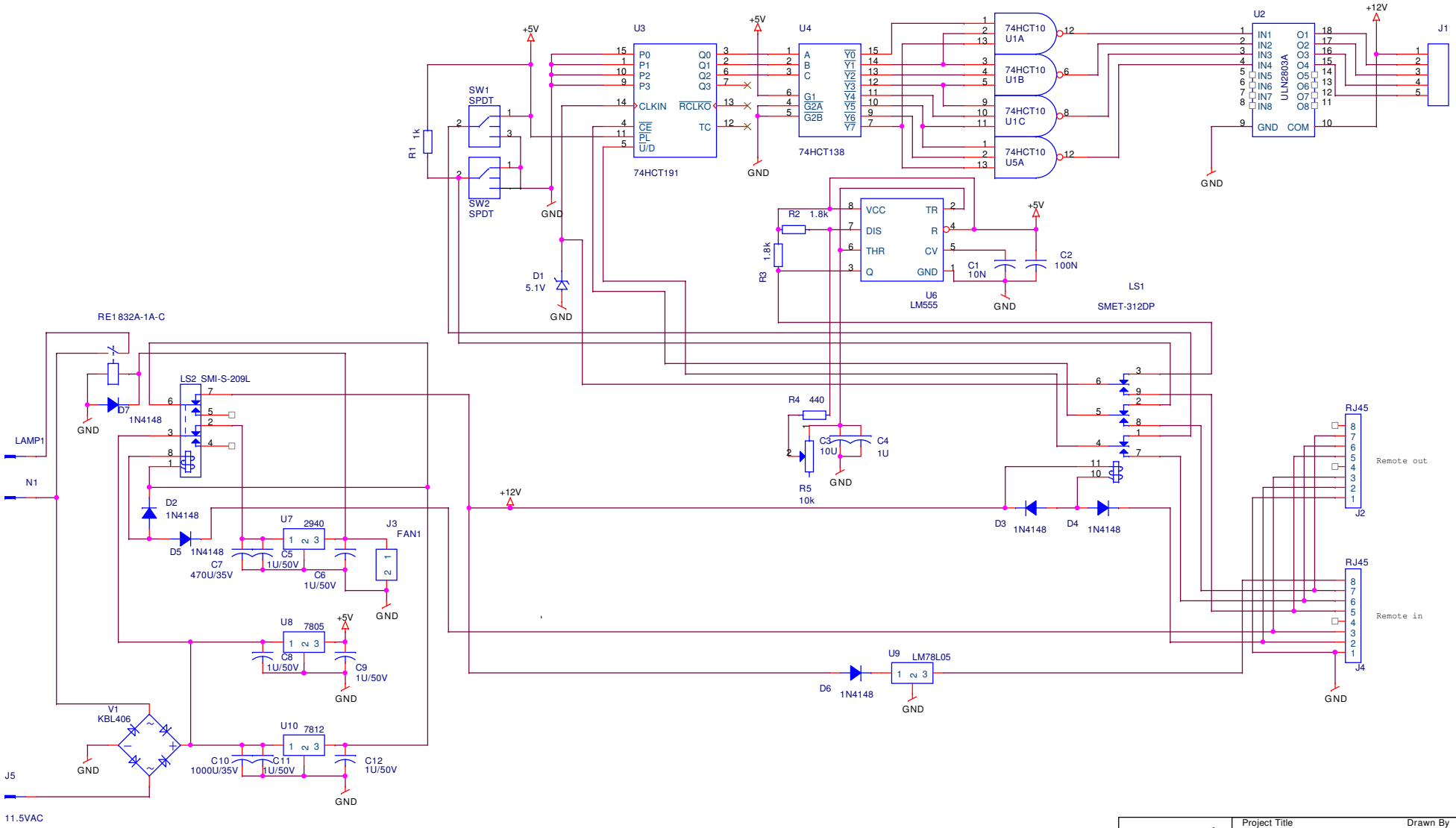

Martin	Project Title: *Mania DC3/PR1*	Drawn By: *LQS*
	Size: B — PCB Title: *Main PCB*	Rev: A
Sheet 1 of 1	Date: Friday, November 12, 2004	Product Baan Number: <Doc>